Transmittal, reproduction, dissemination and/or editing of this document as well as utilization of its contents and communication thereof to others without express authorization are prohibited.
未经允许禁止传输、复制、编辑该文档，以及利用其内容进行交流

| REVISION RECORD | | | | |
|---|---|---|---|---|
| REV | CN | DESCRIPTION | DRFT | DATE |
| | | | | |

General information:

1. Material: Aluminium die-cast
2. Colour: Grey
3. Surface: Powder-coated
4. Operating temperature: -40℃~+125℃
5. Degree of protection acc.to DIN EN60529 for coupled connector: IP65
6. Locking element:
   Locking type: Single locking latch
   Material: Metal galvanized/nickel plating
7. Outgoing direction: Top entry
8. Thread specifications: M/PG
9. Hoods&Housings seal: NBR
10. Undimensioned Tolerances:

| Pitch Range In mm | | | Nominal Dimension Range In mm | | | | | | |
|---|---|---|---|---|---|---|---|---|---|
| TO 6 | Over 6 TO 10 | Over 10 TO 24 | TO 30 | Over 30 TO 60 | Over 60 TO 100 | Over 100 TO 150 | Over 150 | 0.1/10 | |
| ±0.15 | ±0.20 | ±0.30 | ±0.30 | ±0.50 | ±0.70 | ±1.00 | ±1.30 | ±2° | |

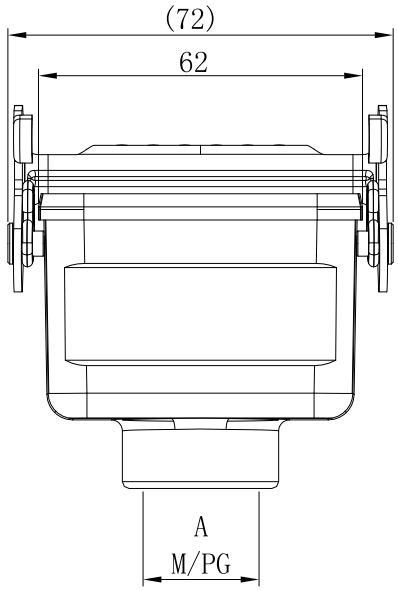


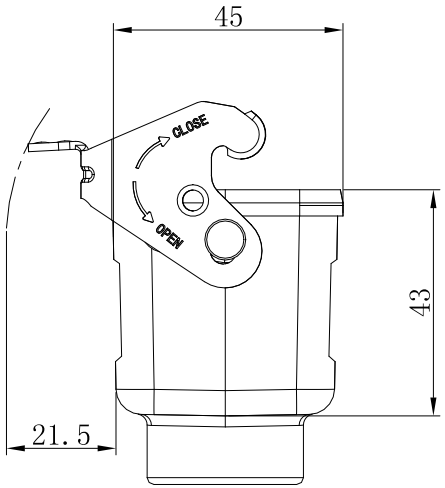


## HOW TO ORDER:

S6B-BM-1L.M

- Locking lever
  - 1L: 1 levers(plastic)
  - 2L: 2 levers(plastic)
  - 1L.M: 1 levers(Metal)
  - 2L.M: 2 levers(Metal)
  - 2B: 2 bolts
  - 4B: 4 bolts
- Housing type
  - SE: Side entry
  - SEH: Side entry-high construction
  - TE: Top entry
  - TEH: Top entry-high construction
  - BM: Bulkhead mounted
  - SM: Sueface mounted
  - SMH: Sueface mounted-high construction
  - CC: Cable to cable
  - CCH: Cable to cable high construction
- Sereies
  - S3A: 3A Compact type
  - S10A: 10A Compact type
  - S16A: 16A Compact type
  - S32A: 32A Compact type
  - S6B: 6B Standard type
  - S10B: 10B Standard type
  - S16B: 16B Standard type
  - S24B: S24B Standard type
  - S32B: S32B Standard type
  - S48B: S48B Standard type

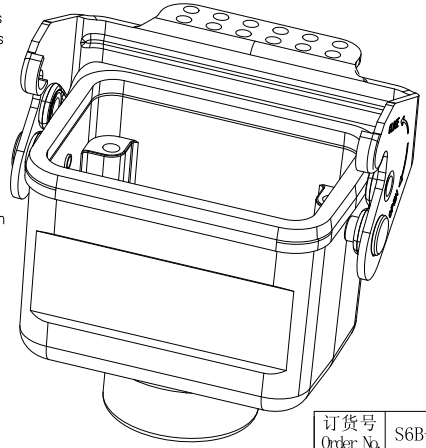

| Order number | A |
|---|---|
| S6B-CC-1L.M-M20 | M20×1.5 |
| S6B-CC-1L.M-PG13.5 | PG13.5 |
| S6B-CC-1L.M-PG16 | PG16 |

| | | | | | | | |
|---|---|---|---|---|---|---|---|
| 订货号 Order No. | S6B-CC-1L.M-XXX | | 名 称 Name | S6B电缆对接 金属单扣底座 | 未注公差 Tolerance | 表面 Surface | |
| 项 目 Item | 签 字 Signature | 日 期 Date | | | Tolerances Table | VDI21 | |
| 设 计 Design | CHH | 2024.07.12 | 图 号 Drawing No. | / | 版本号 Revision Number | 重量 Weight | 比例 Scale |
| 审 核 Check | CHH | 2024.07.12 | 材 料 Material | / | M0 | / | 1:1 |
| 工 艺 Process | - | - | 物料号 Item No. | / | 第1页/共1页 1 of 1 | mm | |
| 标准化 Unify | - | - | | ... | SUPU 宁波速普电子有限公司 NINGBO SUPU ELECTRONICS CO.,LTD. | | |
| 批 准 Approve | XJ | 2024.07.12 | | / | | | |

借通用件登记 Common Part

原图号 Old Draw. No.

底图总号 Assembly No.