Transmittal, reproduction, dissemination and/or editing of this document as well as utilization of its contents and communication thereof to others without express authorization are prohibited.
未经允许禁止传输、复制、编辑该文档，以及利用其内容进行交流

REVISION RECORD				
REV	CN	DESCRIPTION	DRFT	DATE

General information:
1. Material: Aluminium die-cast
2. Colour: Grey
3. Surface: Powder-coated
4. Operating temperature: -40℃~+125℃
5. Degree of protection acc.to DIN EN60529 for coupled connector: IP65
6. Outgoing direction: Side entry
7. Locking element:
   Locking type: Double locking latch
   Material: metal galvanized/nickel plating
8. Thread size: M/PG
9. Hoods&Housings seal: NBR
10. Undimensioned Tolerances:

Pitch Range In mm			Nominal Dimension Range In mm					– ⌒ ⌭
TO 6	Over 6 TO 10	Over 10 TO 24	TO 30	Over 30 TO 60	Over 60 TO 100	Over 100 TO 150	Over 150	0.1/10 ∠
±0.15	±0.20	±0.30	±0.30	±0.50	±0.70	±1.00	±1.30	±2°

HOW TO ORDER:
S32A-BM-2L.M

Locking lever —— 1L: 1 levers(plastic) 2B: 2 bolts
2L: 2 levers(plastic) 4B: 4 bolts
1L.M: 1 levers(Metal)
2L.M: 2 levers(Metal)

Housing type —— SE: Side entry
SEH: Side entry-high construction
TE: Top entry
TEH: Top entry-high construction
BM: Bulkhead mounted
SM: Sueface mounted
SMH: Sueface mounted-high construction
CC: Cable to cable
CCH: Cable to cable high construction

Sereies —— S3A: 3A Compact type S6B: 6B Standard type
S10A: 10A Compact type S10B: 10B Standard type
S16A: 16A Compact type S16B: 16B Standard type
S32A: 32A Compact type S24B: S24B Standard type
S32B: S32B Standard type
S48B: S48B Standard type

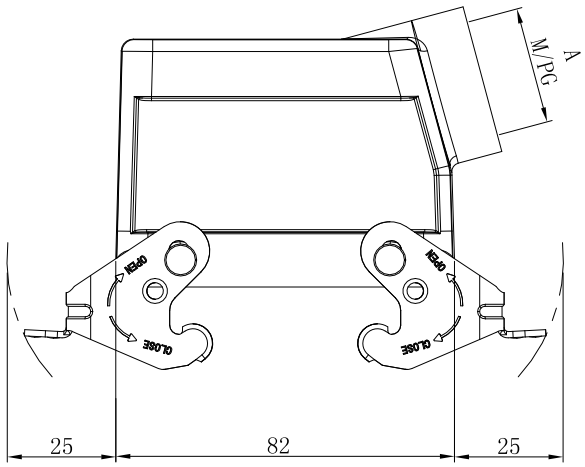

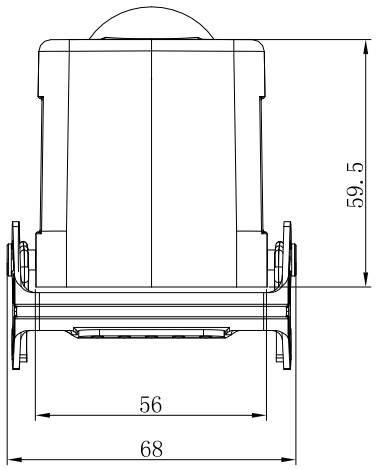

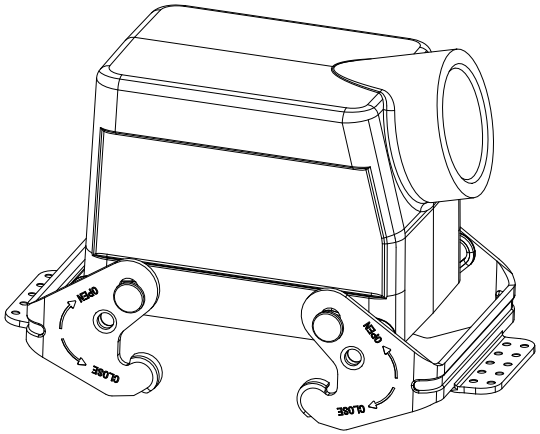

Order number	A
S32A-SE-2L.M-M25	M25×1.5
S32A-SE-2L.M-PG21	PG21

订货号 Order No.	S32A-SE-2L.M-XXX		名 称 Name	S32A边出线 金属双扣上壳-XXX	未注公差 Tolerance	表面 Surface	
项 目 Item	签 字 Signature	日 期 Date			Tolerances Table	VDI21	
设 计 Design	CHH	2024.07.11	图 号 Drawing No.	/	版本号 Revision Number	重量 Weight	比例 Scale
审 核 Check	CHH	2024.07.11	材 料 Material	/	M0	/	1:1
工 艺 Process	-	-	物料号 Item No.	/	第1页/共1页 1 of 1	mm	
标准化 Unify	-	-		...	SUPU 宁波速普电子有限公司 NINGBO SUPU ELECTRONICS CO.,LTD.		
批 准 Approve	XJ	2024.07.11		/			

借通用件登记 Common Part

原图号 Old Draw. No.

底图总号 Assembly No.